Year 5 - Finding Missing Numbers (+ and –) — Lesson Guide

Step 1

□ – 415 = 312

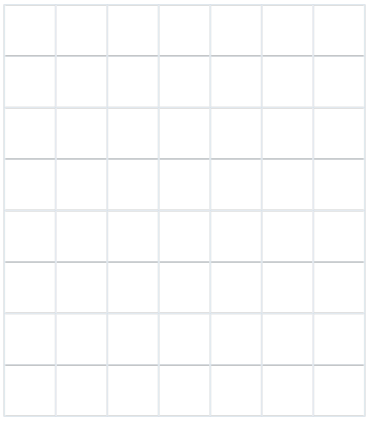

First, we circle the minus sign. We look at the operation in the question before choosing how to find the missing number.

Step 2

□ – 415 = 312

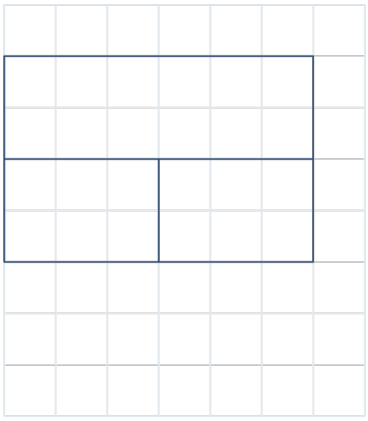

Remember: The box asks for a missing number. Put it back in the same place to check.

Read the calculation with the blank. Something take away 415 leaves 312. We are finding the whole we started with, called the minuend. Draw the whole bar above the two parts.

Step 3

□ – 415 = 312

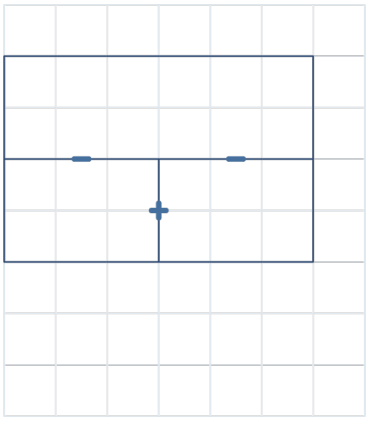

Next, we draw bold minus signs between the whole and its parts, and a bold plus sign between the two parts. This shows us that the two parts add to make the whole and, to find a part, we subtract the other part from the whole.

Step 4

□ – 415 = 312

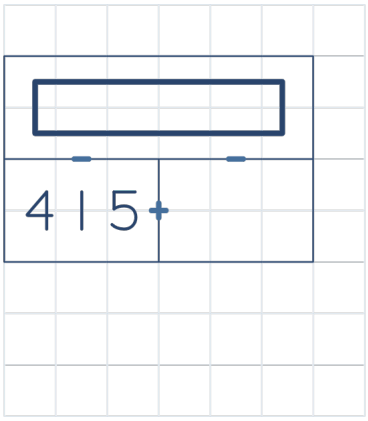

Draw an empty box in the whole bar for the missing number. Write 415 in the left part.

Step 5

□ – 415 = 312

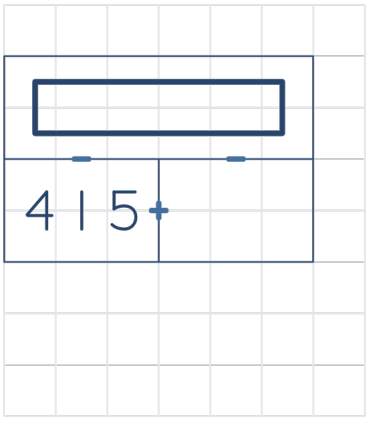

Check the two entries before filling the last space. Read the question up to the equals sign as something take away 415. In the bar model, the blank in the whole bar and 415 in the left part should read as something take away 415. If the entries match, fill the last space. If they differ, correct the model first.

Step 6

□ – 415 = 312

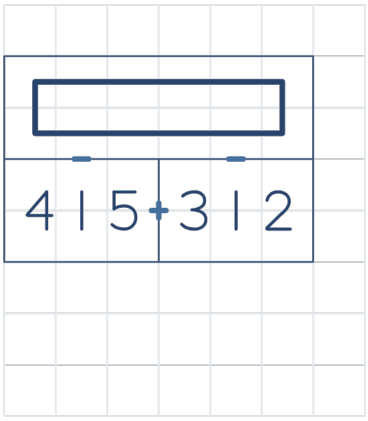

Write 312 in the right part.

Step 7

□ – 415 = 312

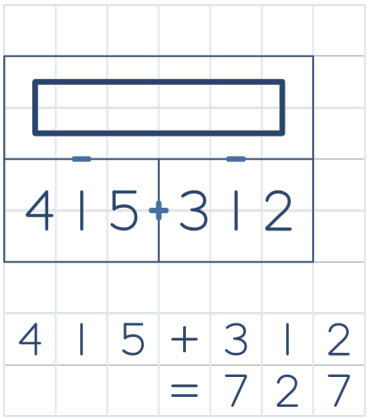

We add the two parts to find the whole. I can partition 312 into 300 and 10 and 2. I am going to add these parts mentally, starting with the greatest place value. 415 + 312 = 727.

Step 8

727 – 415 = 312

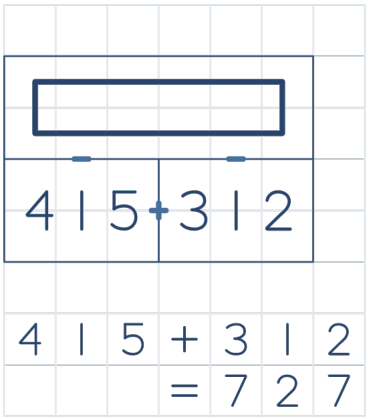

Now, we put 727 into the blank in the original question. Make sure you copy the answer correctly.

Step 9

727 – 415 = 312

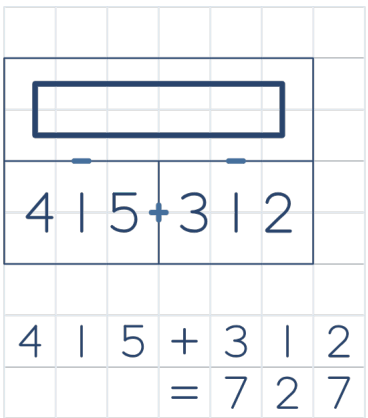

Put 727 in the blank and use the operation in the question. Work out 727 – 415. That gives 312. The result matches 312 on the right. If you get a different number, check that you used the operation in the question. Then work it out again.